TrackVision
ASSEMBLY GUIDE

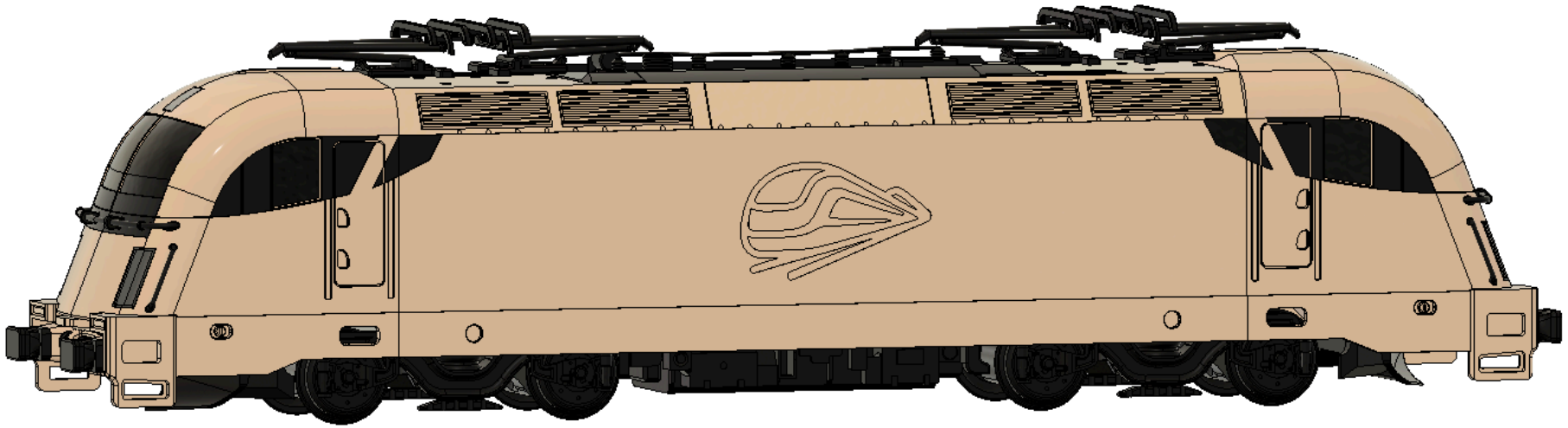

Before starting, decide how you want to build your locomotive:

- **Option A:** Modular Build ***(Recommended – Uses Magnets)***
  Uses neodymium magnets so the model can be easily opened in the future. Recommended if you plan to add electronics or motors later.

- **Option B:** Permanent Build **(Glue Only – Uses Alignment Pins)**
  If you don't want to use magnets, print the included Alignment_Pin.3mf files. Insert them into the magnet slots and permanently glue the parts together using CA glue.

(If you plan to upgrade your train in the future, choose Option A so you can access the interior!)

KEY ASSEMBLY RULES

- Follow the Steps: Assemble the parts strictly in the order shown in this guide.
- Check Magnet Polarity: Double-check magnet orientation before gluing—reversed magnets will repel!
- Mind Tolerances: If a joint is too tight due to print tolerances, lightly sand the pin or slot instead of forcing it.



12x

2x5mm neodymium magnet
(only Option A)

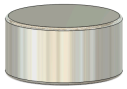

72x

4x2mm neodymium magnet
(only Option A)

PLEASE PREPARE



CA Glue

Use if needed due to loose fit

©Mižufko

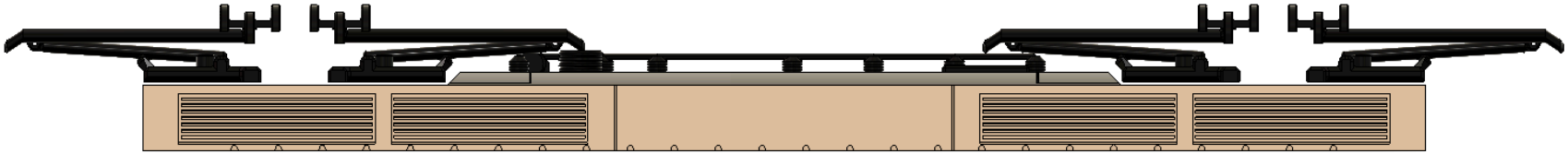

ROOF ASSEMBLY

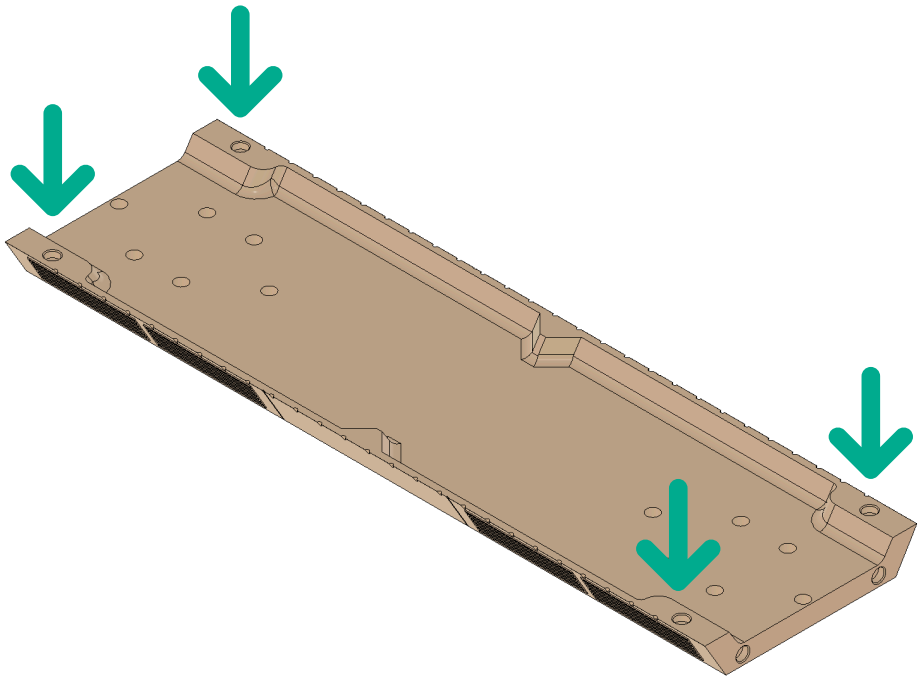

- Prepare the printed **roof part**
- Orient it as shown in the image
- Insert 4x **4x2mm neodymium magnets** into the indicated slots

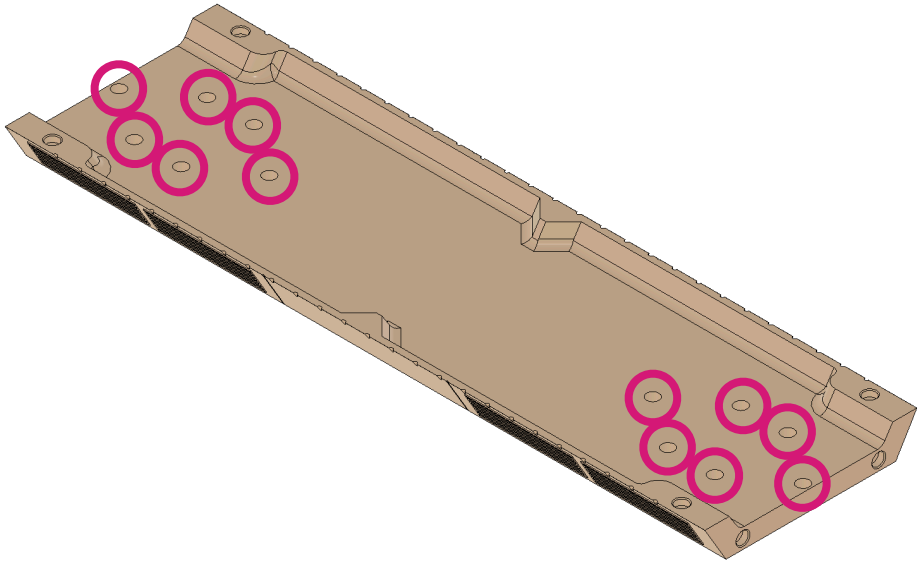

- Insert 6x **4x2mm neodymium magnets** into the indicated slots

©Mižufko

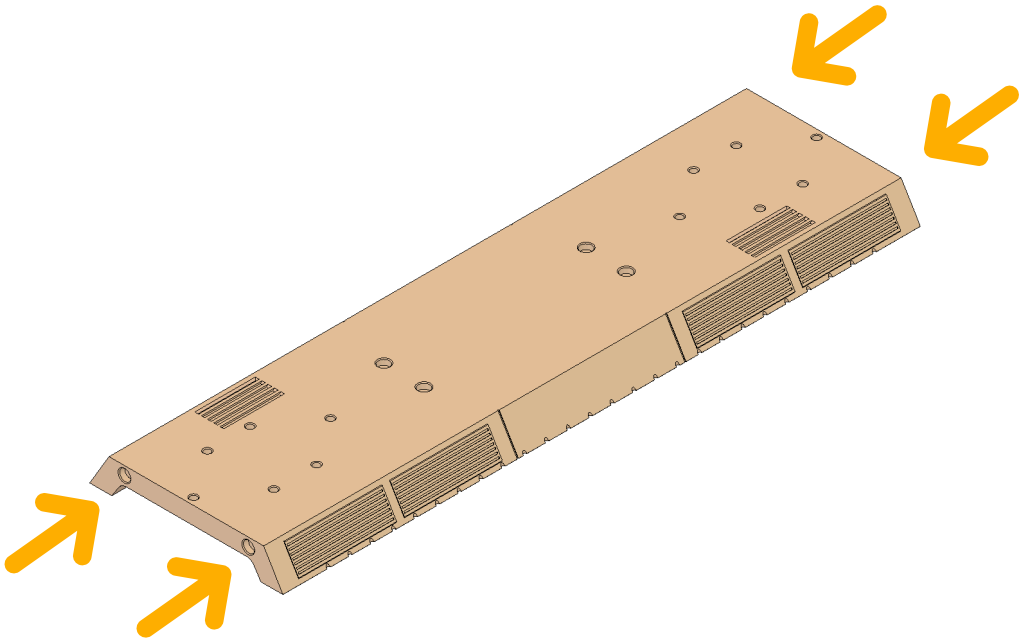

- Turn the roof as shown in the image
- Insert 4x **4x2mm neodymium magnets** into the indicated slots

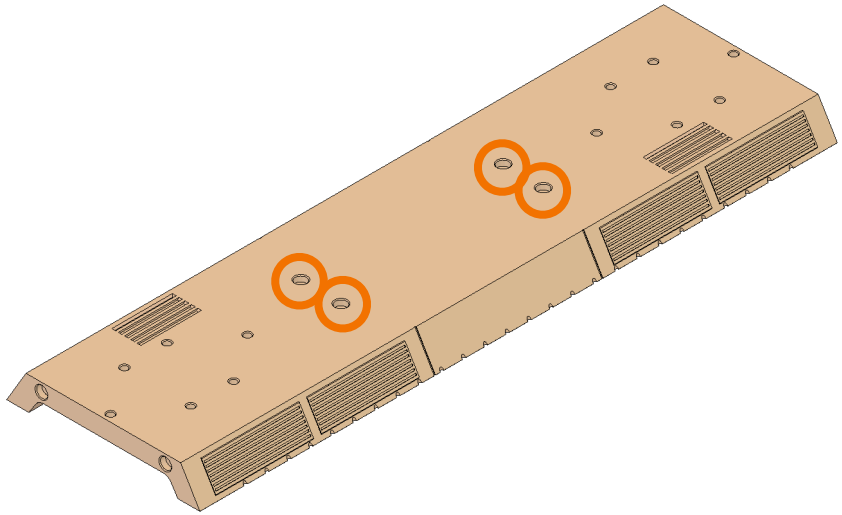

- Insert 4x **4x2mm neodymium magnets** into the indicated slots

©Mižufko

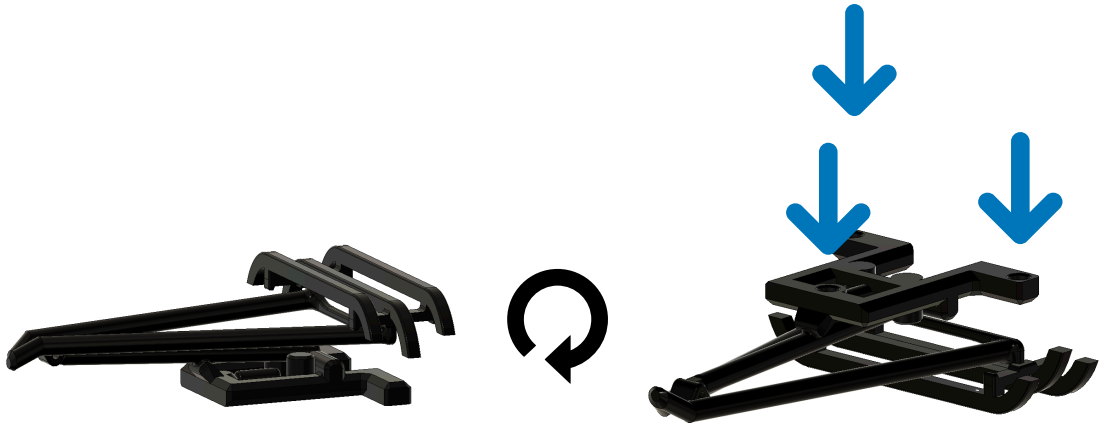

- Prepare the printed **pantograph part**
- Orient it as shown in the image
- Insert 3x **2x5mm neodymium magnets** into the indicated slots

  (Option B: Glue pantographs directly onto the roof)
- Repeat the whole process **4 times**
- **WARNING!** Ensure correct magnet polarity so the pantographs are attracted to the roof, not repelled!
- Check **the correct magnet polarity** as shown on the next 2 pages

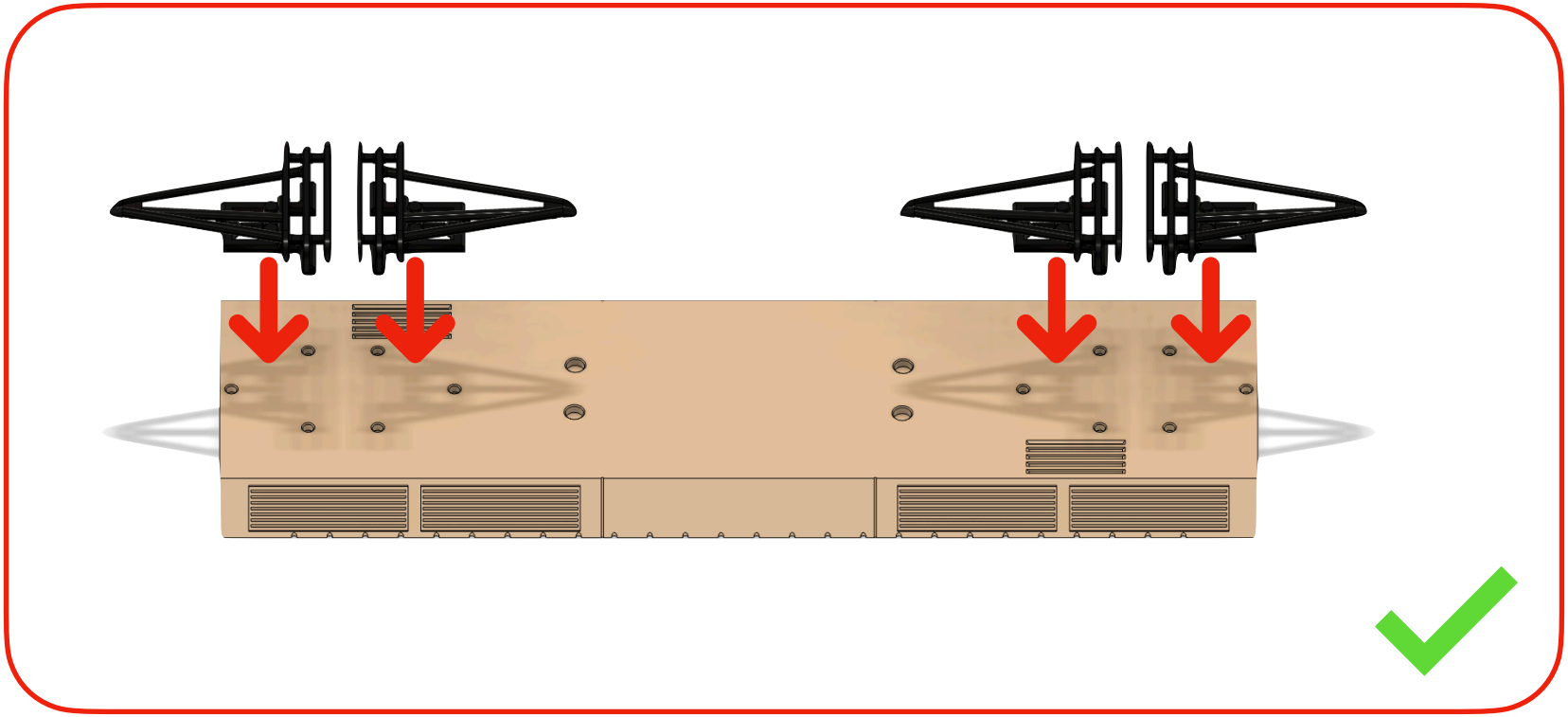

PANTOGRAPHS ARE ATTRACTED TO THE ROOF



PANTOGRAPHS ARE REPELLED FROM THE ROOF

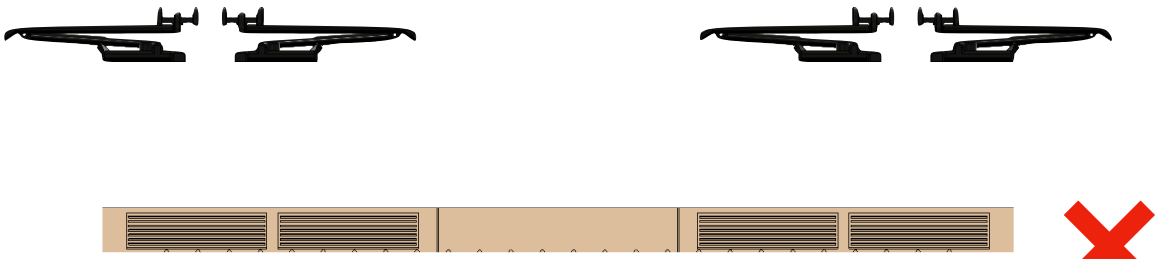

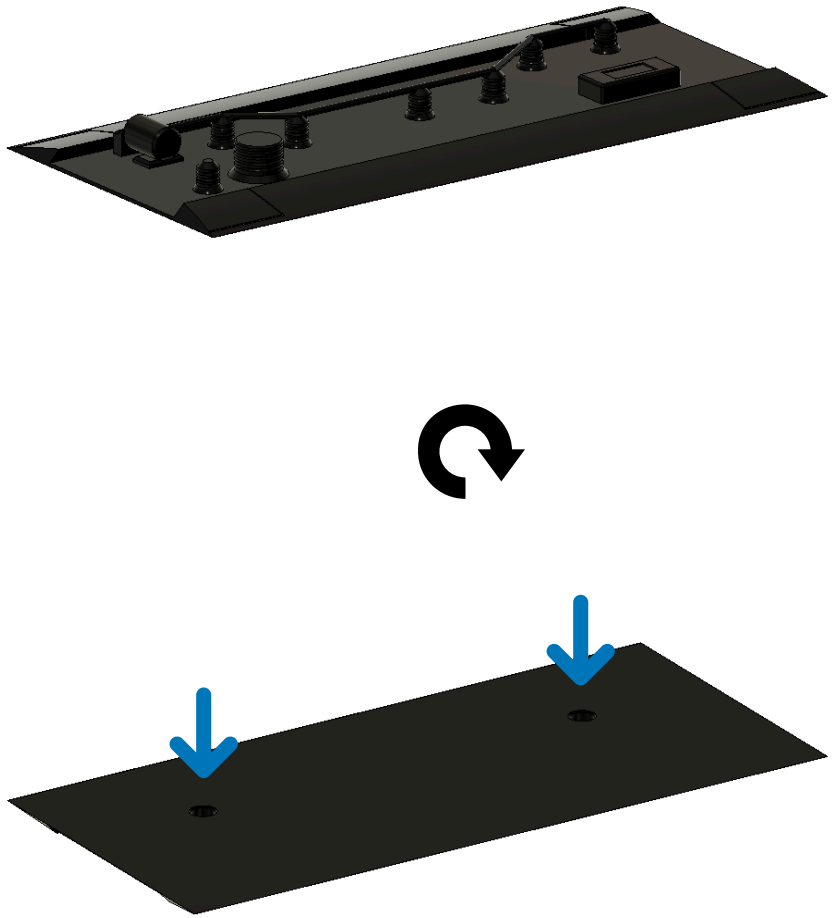

- Prepare the printed **roof cover part**
- Orient it as shown in the image
- Insert 2x **4x2mm neodymium magnets** into the indicated slots
- **WARNING!** Ensure correct magnet polarity so the cover is attracted to the roof, not repelled!
- Check **the correct magnet polarity** as shown on the next page

THE COVER IS ATTRACTED TO THE ROOF

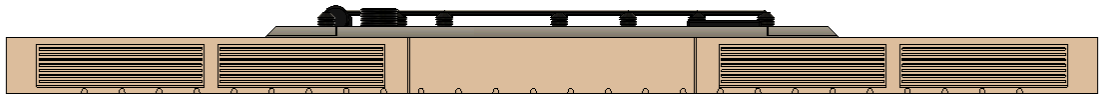

THE COVER IS REPELLED FROM THE ROOF





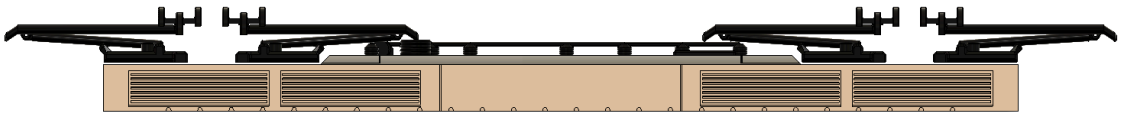

- **CONGRATULATIONS!** The roof is complete!
- **Set it aside for now**

MAIN BODY ASSEMBLY

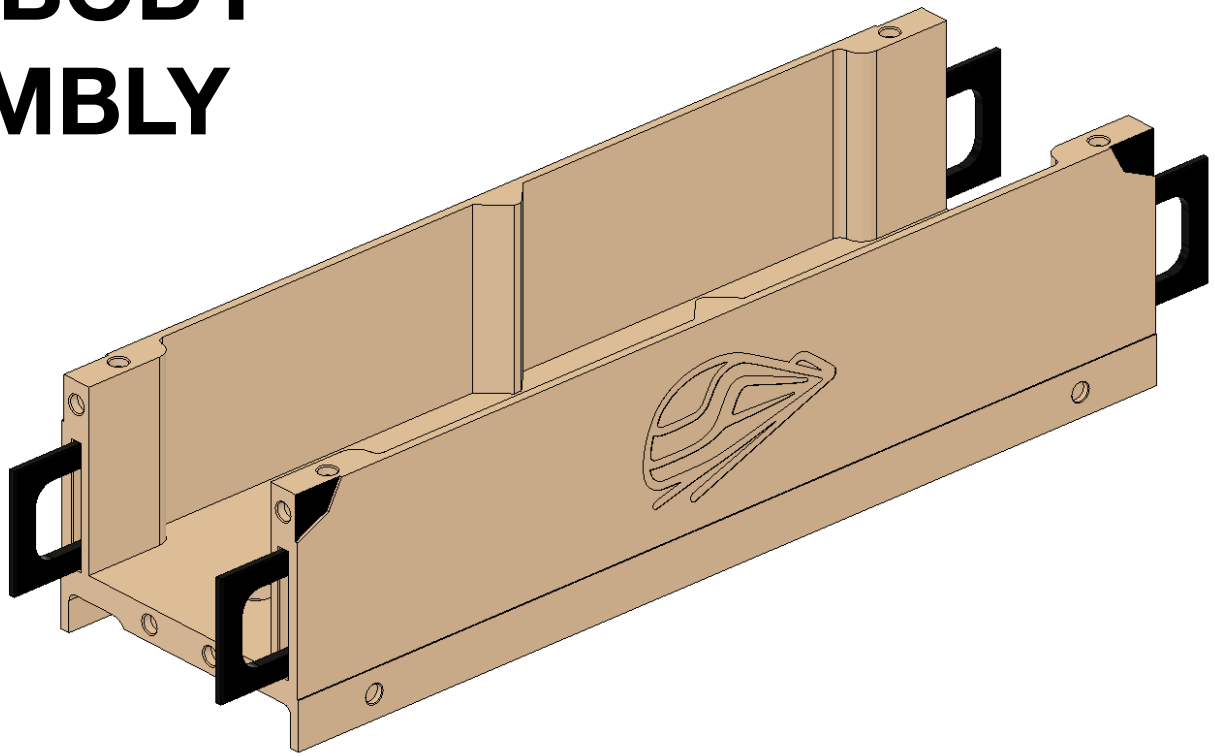

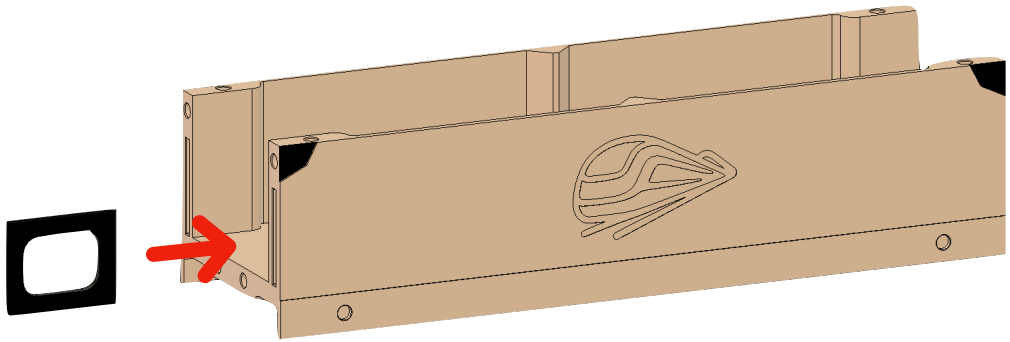

- Prepare the printed **main body**
- Insert **the cabin connector** into the indicated slot
- Repeat **the whole process** for all 4 slots

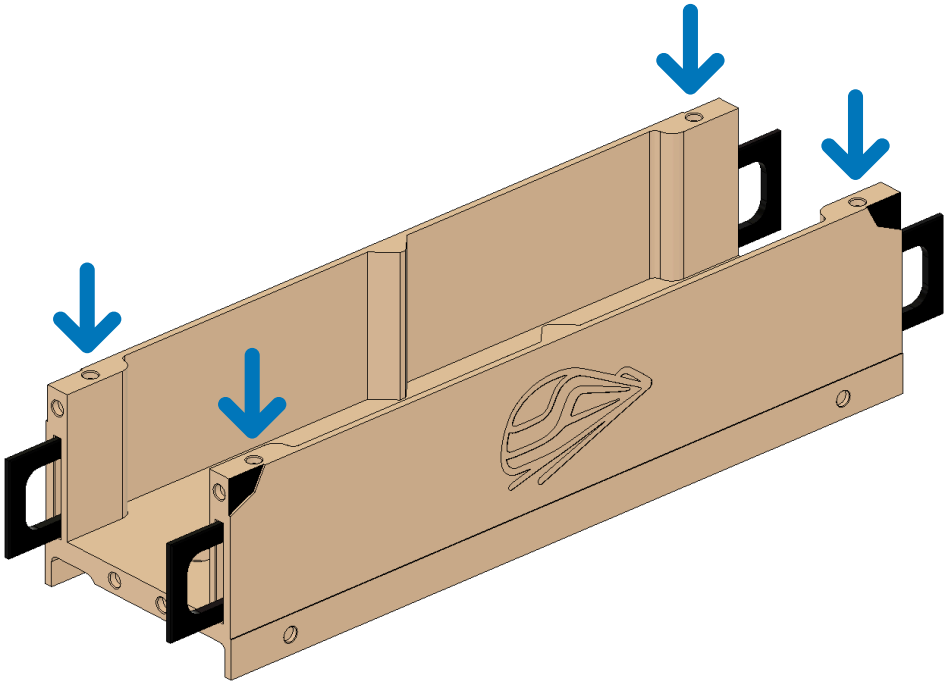

- Insert 4x **4x2mm neodymium magnets** into the indicated slots
- **WARNING!** Ensure correct magnet polarity so the roof is attracted to the main body, not repelled!
- Check **the correct magnet polarity** as shown on the next page

©Mižufko

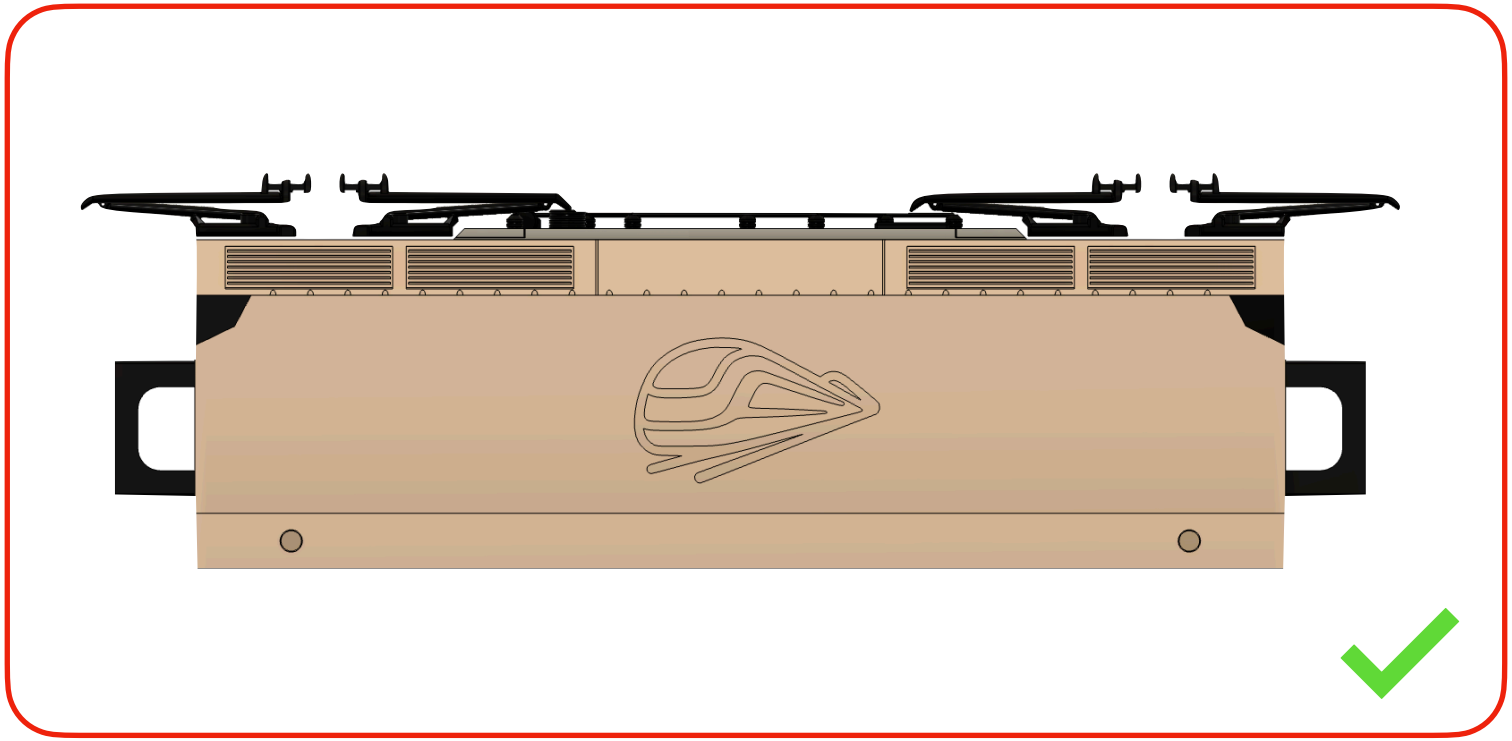

©Mižufko

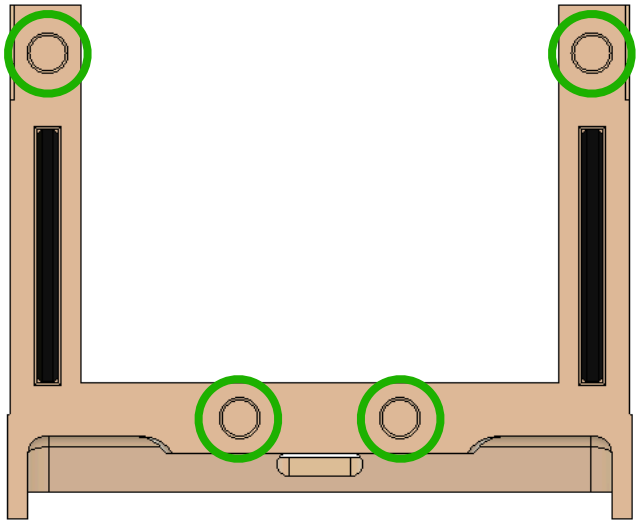

- Insert 4x **4x2mm neodymium magnets** into the indicated slots
- Repeat **the whole process** on the other side

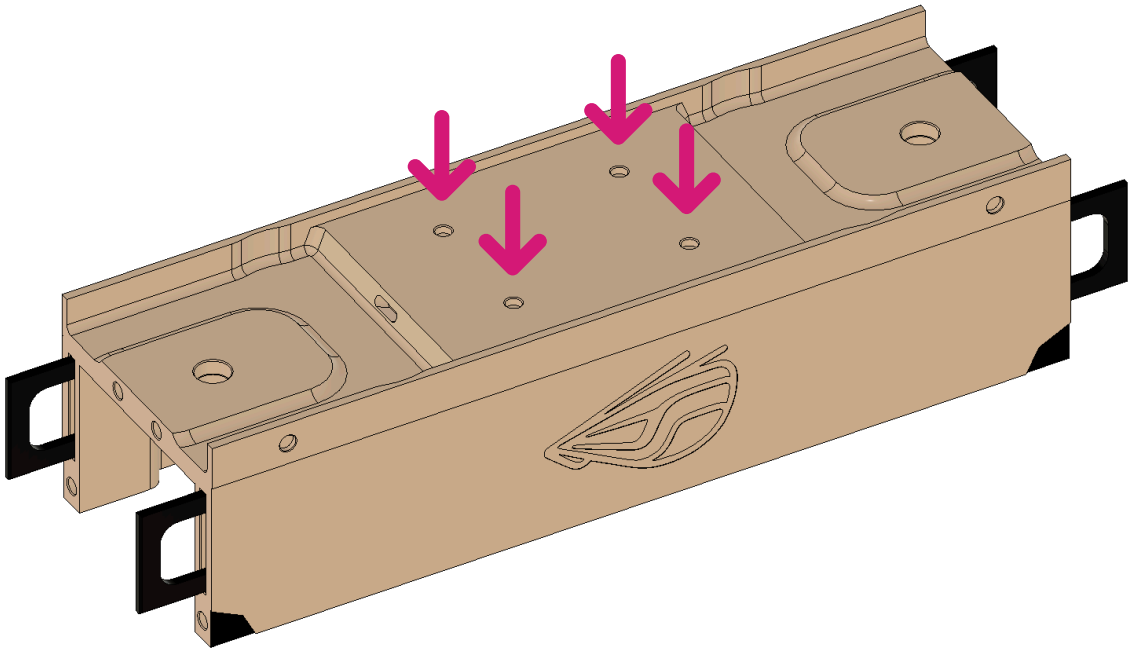

- Insert 4x **4x2mm neodymium magnets** into the indicated slots

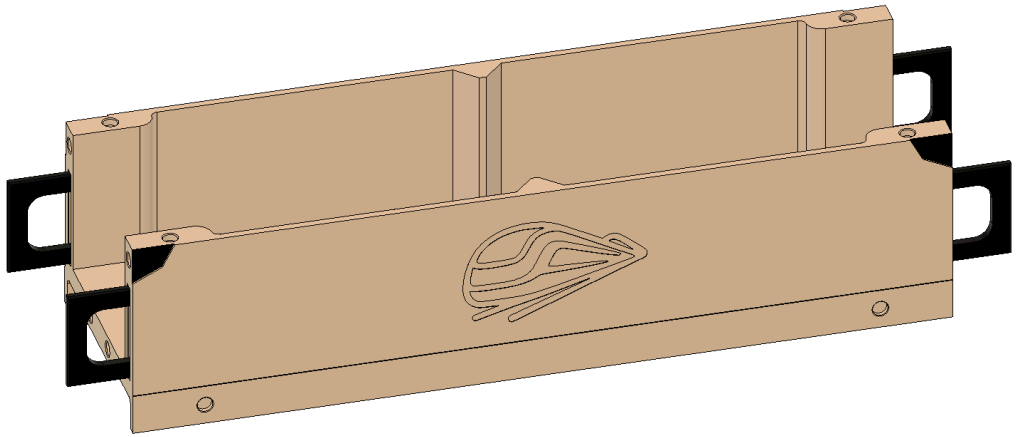

- **CONGRATULATIONS!** The main body is complete!
- **Set it aside for now**



CABIN ASSEMBLY

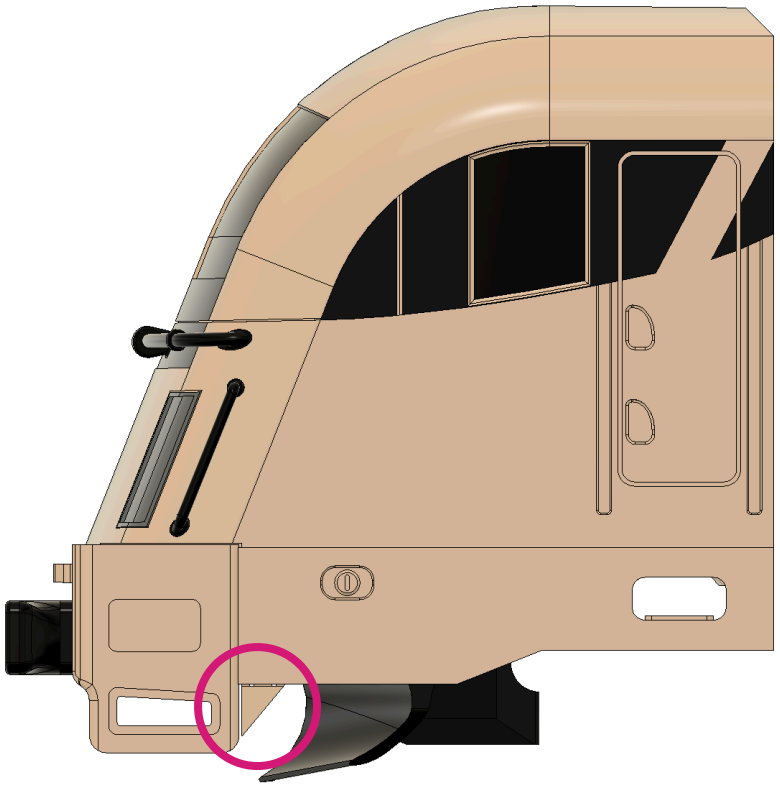

- Prepare the printed **cabin part**
- Use pliers to **snap off the small support piece** by pushing it sideways
- Please **repeat the process** for all 4 supports

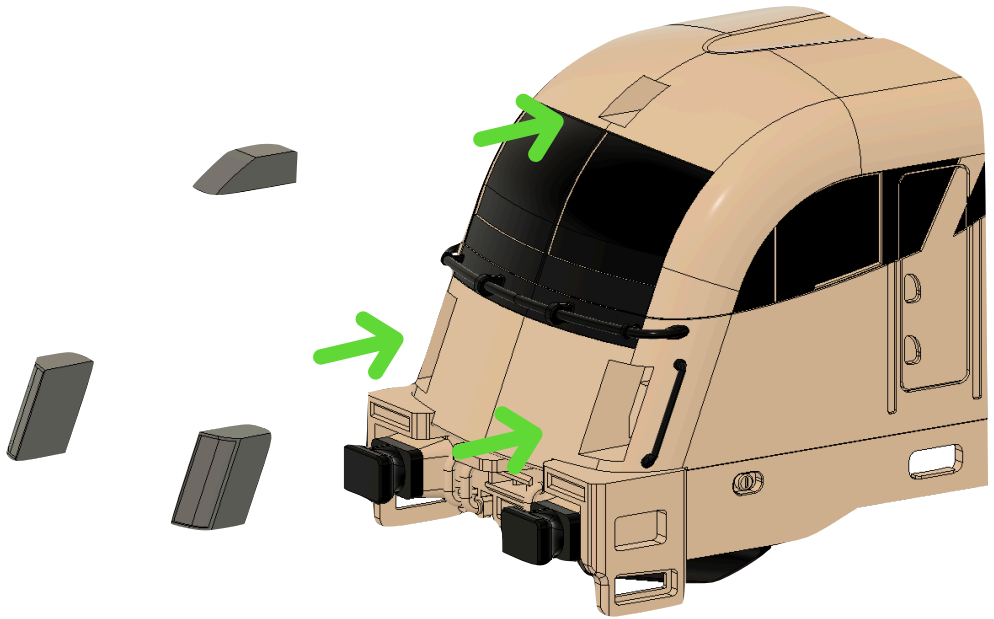

- Insert **the lights** into the indicated slots
- Please mind the correct orientation
- Check **the correct assembly** as shown on the next page

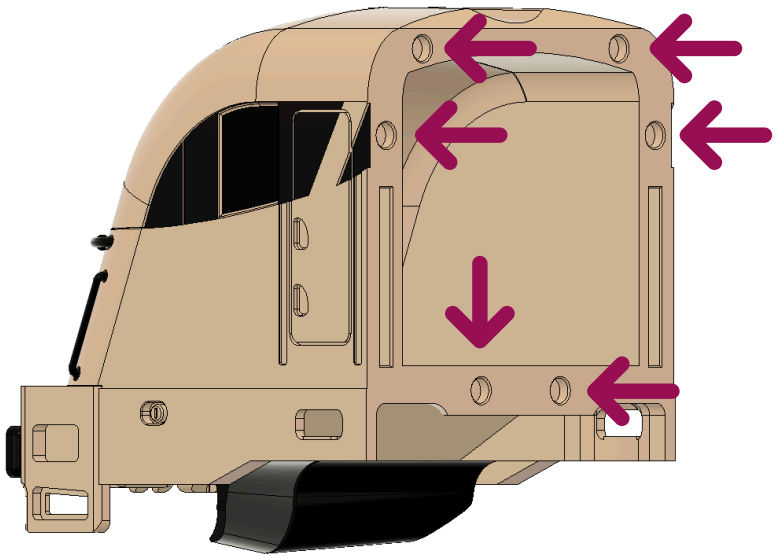

- Orient cabin as shown in the image
- Insert 6x **4x2mm neodymium magnets** into the indicated slots
- **WARNING!** Ensure correct magnet polarity so the cabin is attracted to the roof and main body, not repelled!
- Check **the correct magnet polarity** as shown on the next page

©Mižufko

THE CABIN IS ATTRACTED

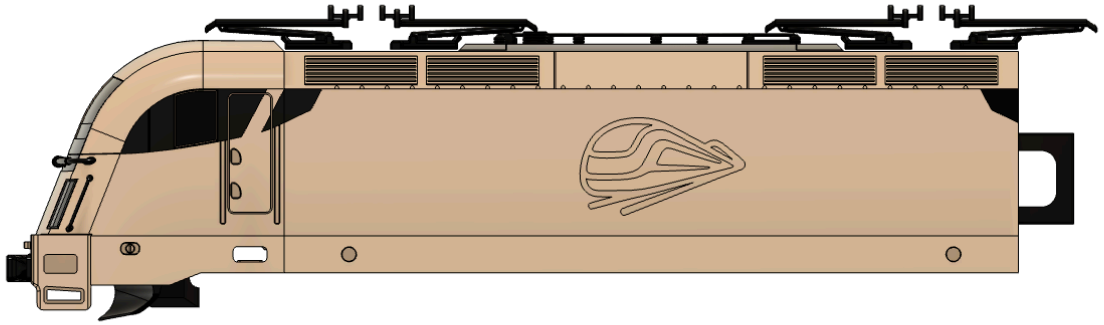

THE CABIN IS REPELLED

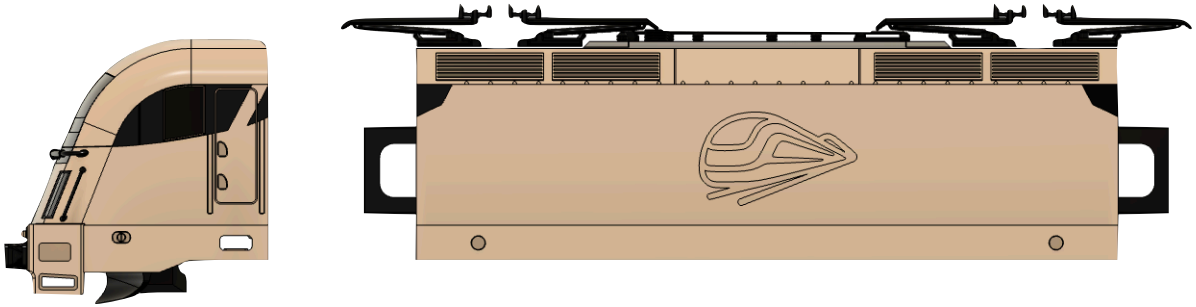

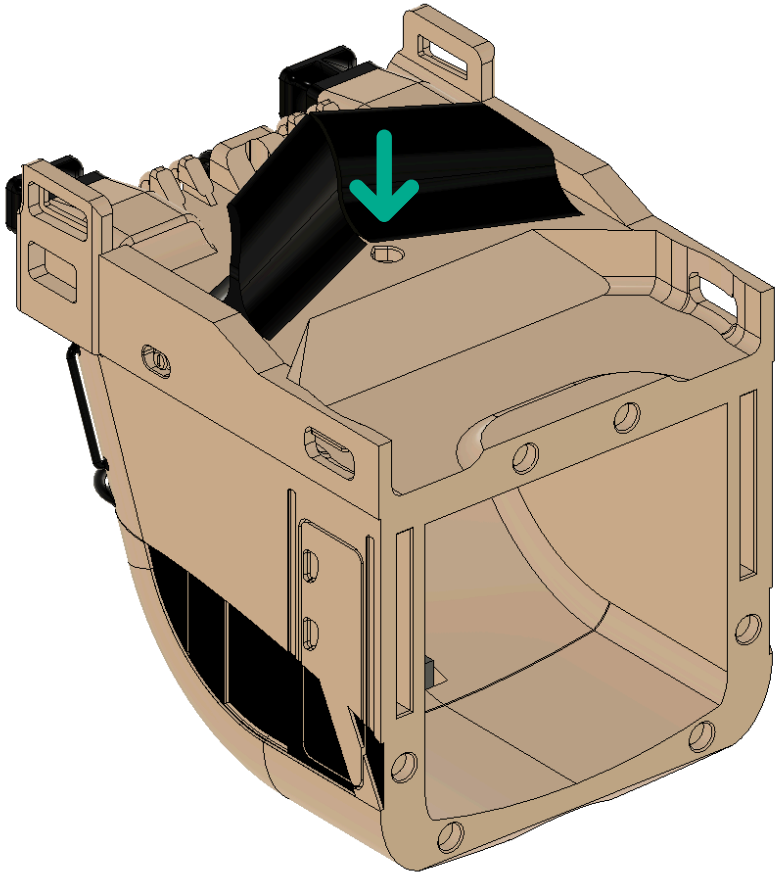

- Orient cabin as shown in the image
- Insert 1x **4x2mm neodymium magnet** into the indicated slots

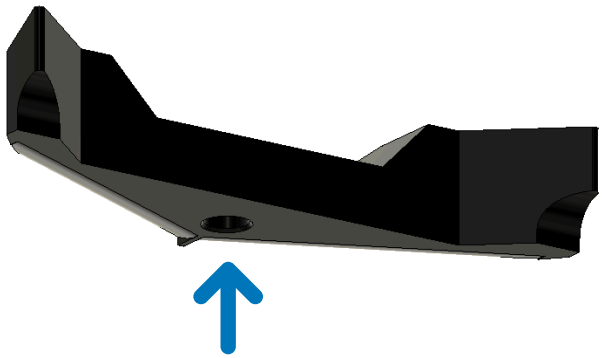

- Prepare the printed **cover part**
- Orient cover as shown in the image
- Insert 1x **4x2mm neodymium magnet** into the indicated slots
- **WARNING!** Ensure correct magnet polarity so the cover is attracted to the cabin, not repelled!
- Check **the correct magnet polarity** as shown on the next page

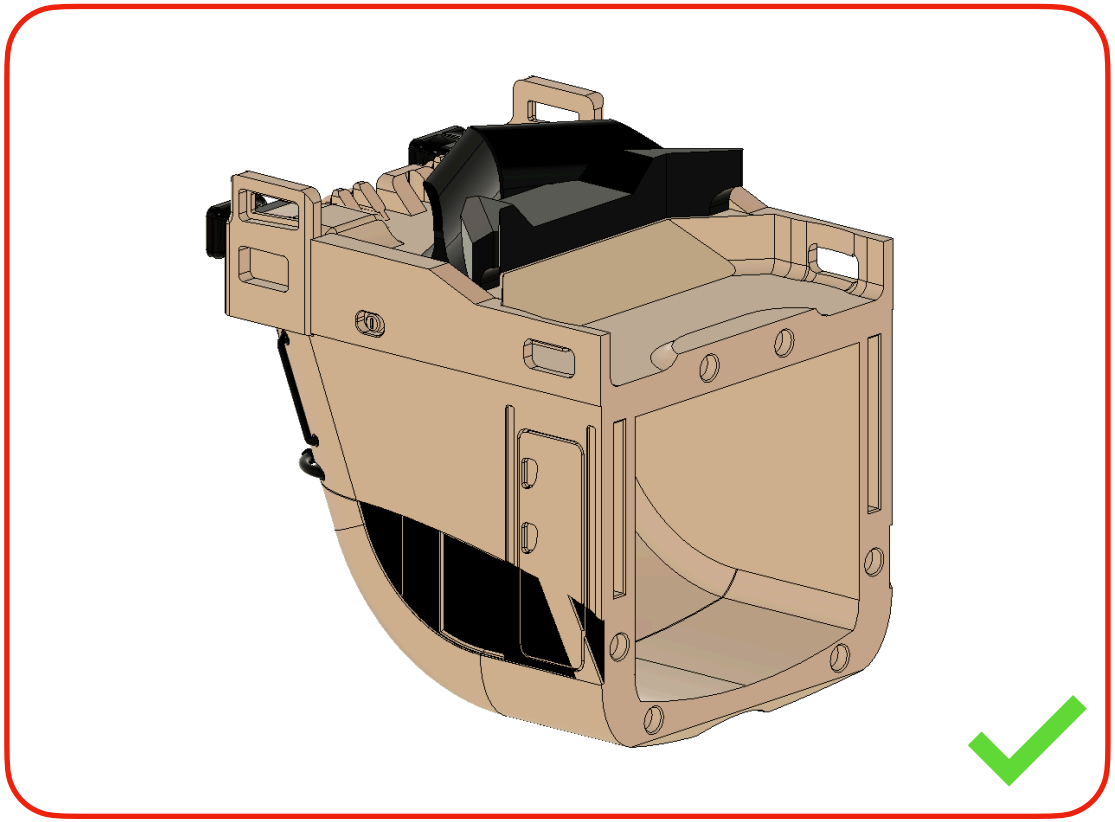

x2

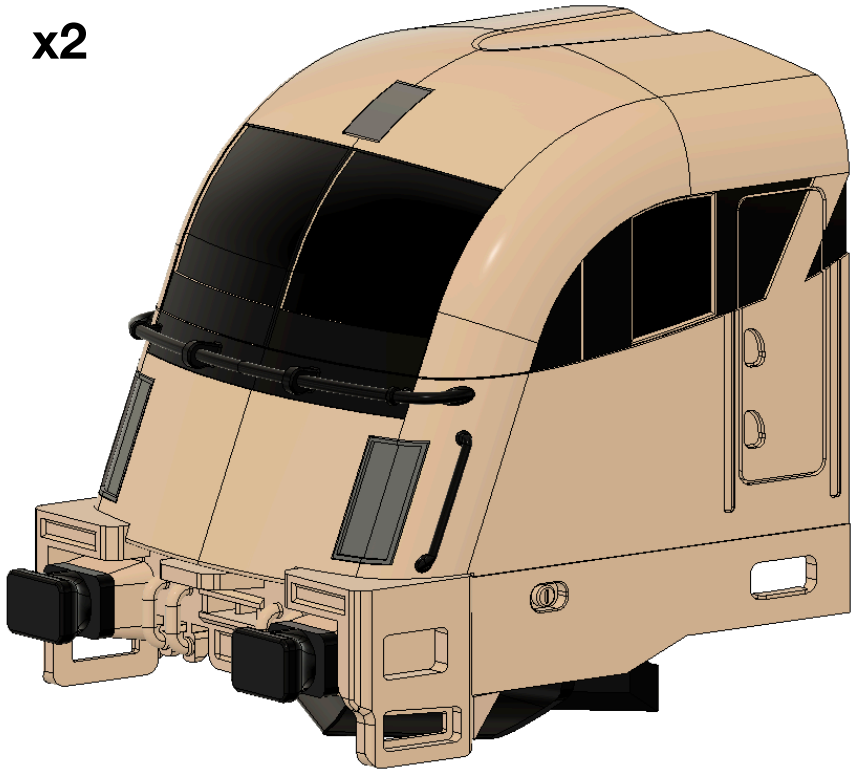

- Please **repeat the cabin assembly** once more for the other side

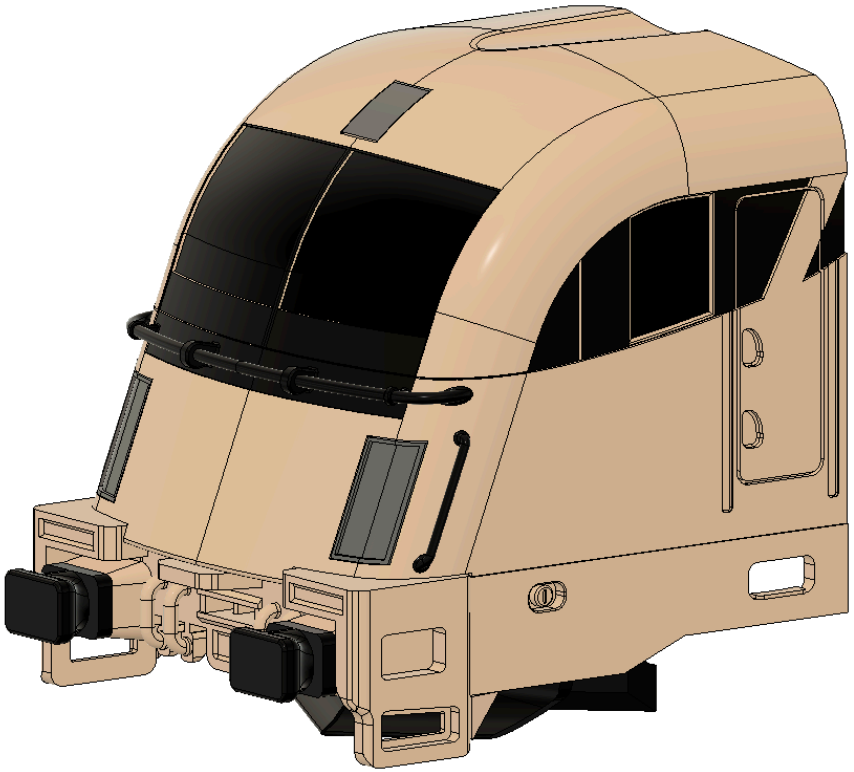

- **CONGRATULATIONS!** The cabins are complete!
- **Set them aside for now**



CHASSIS ASSEMBLY



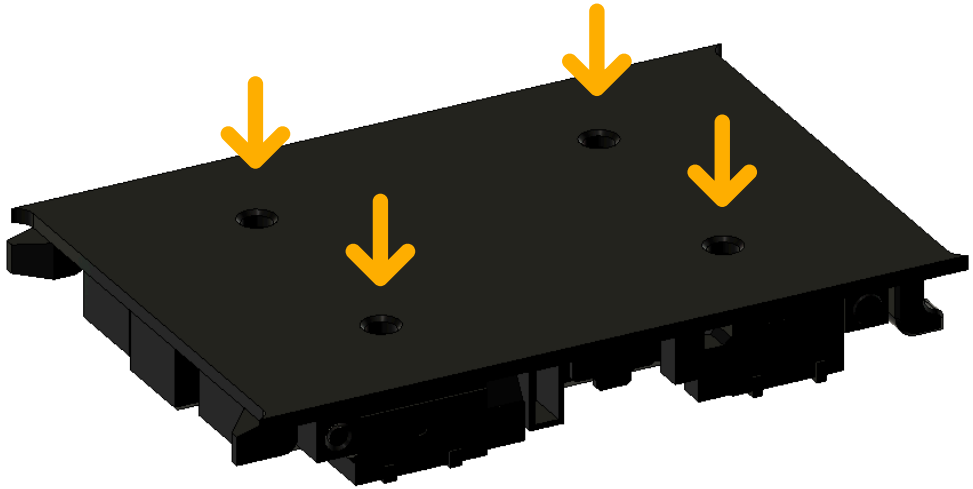

- Prepare the printed **cover part**
- Orient cover as shown in the image
- Insert 4x **4x2mm neodymium magnets** into the indicated slots
- **WARNING!** Ensure correct magnet polarity so the cover is attracted to the main body, not repelled!
- Check **the correct magnet polarity** as shown on the next page

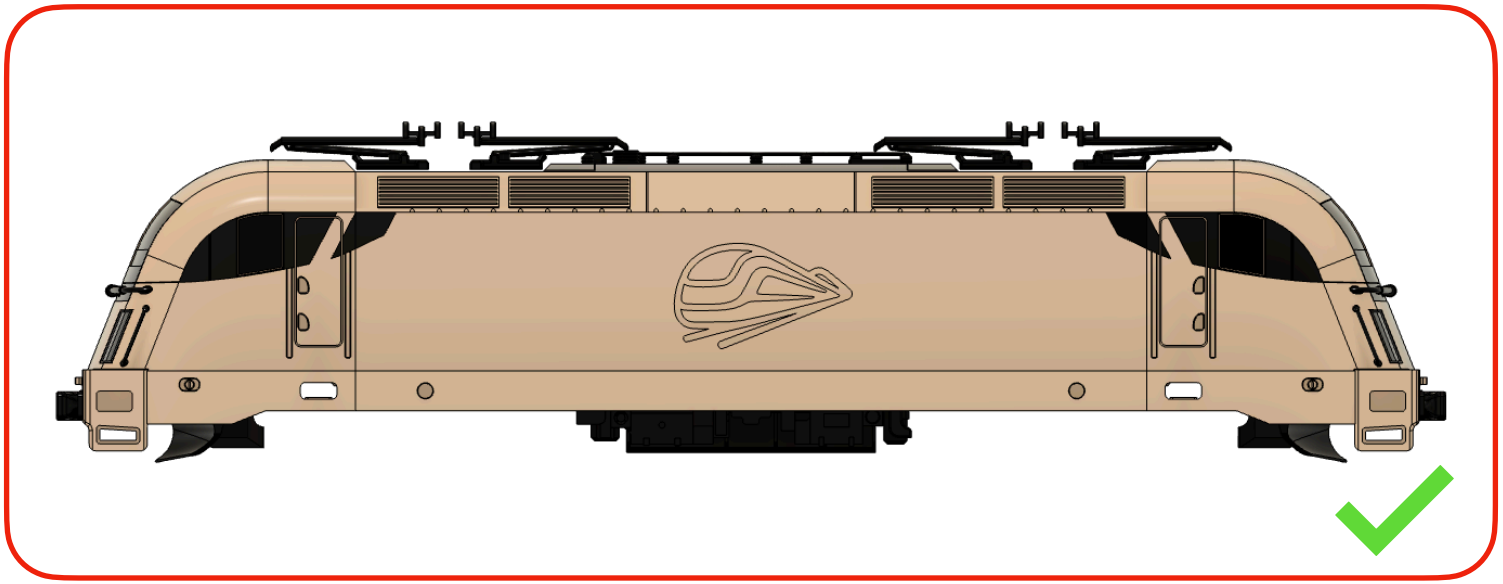

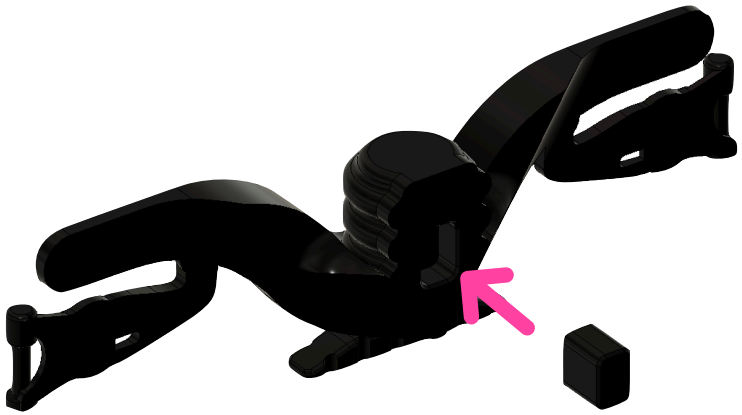

- Prepare the printed **side cover part**
- Orient it as shown in the image
- Insert **the mount** into the indicated slots
- Repeat the whole process **2 times**

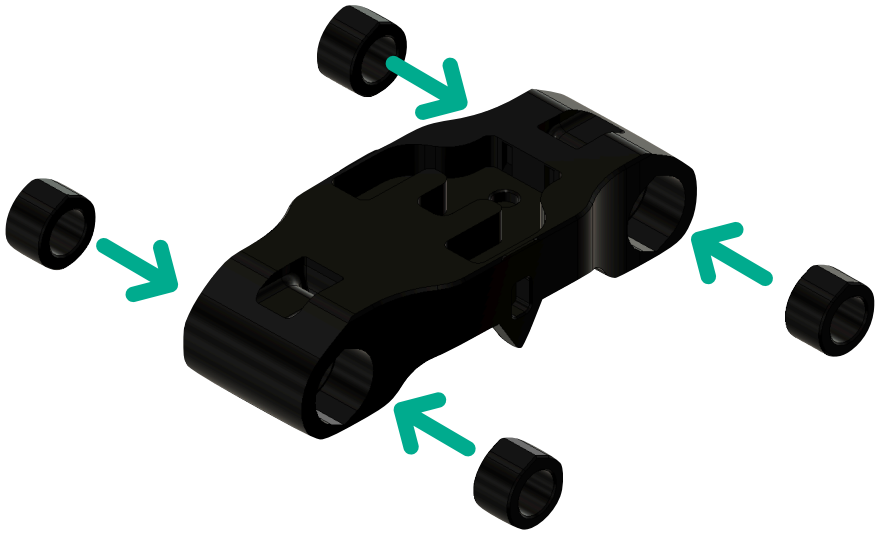

- Prepare the printed **truck part**
- Orient it as shown in the image
- Place the inserts into the indicated slots
- Please mind the correct orientation



- Orient truck as shown in the image
- Insert 1x 4x2mm neodymium magnet into the indicated slot



- Orient truck as shown in the image
- Insert 2x **4x2mm neodymium magnets** into the indicated slots

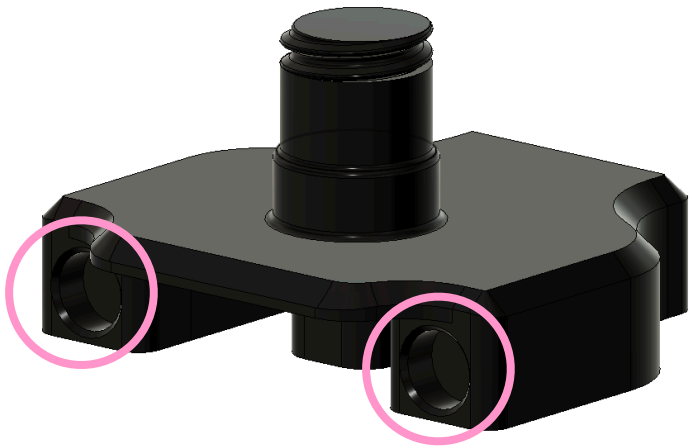

- Prepare the printed **bracket part**
- Orient bracket as shown in the image
- Insert 2x 4x2mm neodymium magnets into the indicated slots
- **WARNING!** Ensure correct magnet polarity so the bracket is attracted to the truck body, not repelled!
- Check the **correct magnet polarity** as shown on the page 42

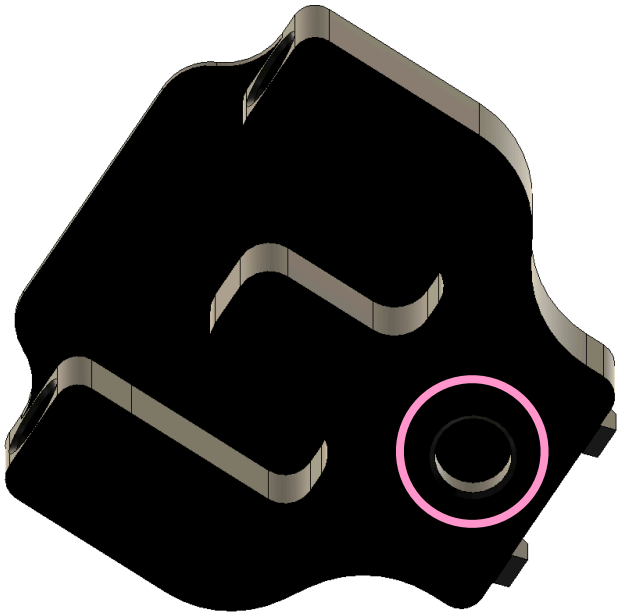

- Orient bracket as shown in the image
- Insert 1x 4x2mm neodymium magnet into the indicated slot
- **WARNING!** Ensure correct magnet polarity so the bracket is attracted to the truck body, not repelled!
- Check **the correct magnet polarity** as shown on the next page



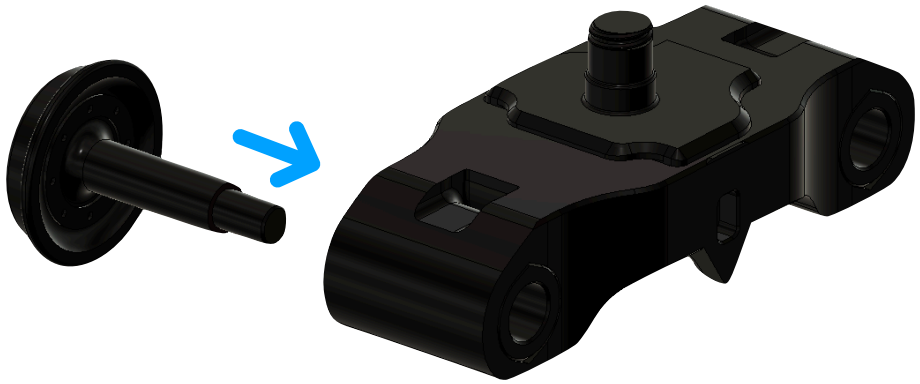

- Prepare the printed **male wheel part**
- Insert the wheel into the truck
- Repeat the whole process 2 **times**

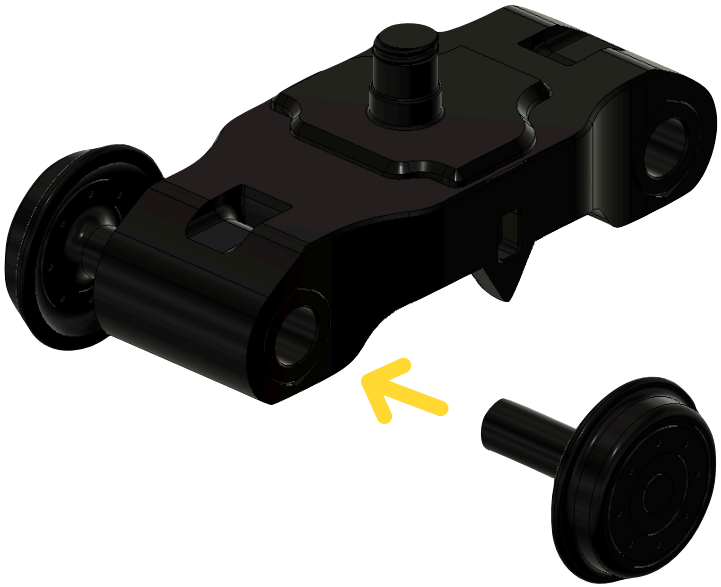

- Prepare the printed **female wheel part**
- Press both wheels together to form the axle inside the truck
- Repeat the whole process **2 times**





- Press both side covers firmly into the mounting holes

x2



- Please repeat **the chassis assembly** once more for the other side



- **CONGRATULATIONS!** The chassis are complete!

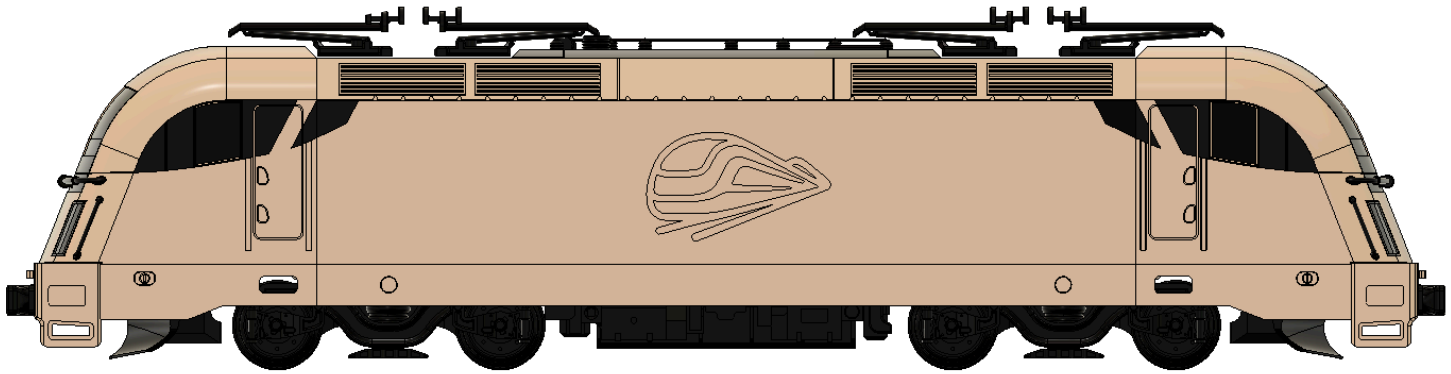

FINAL ASSEMBLY

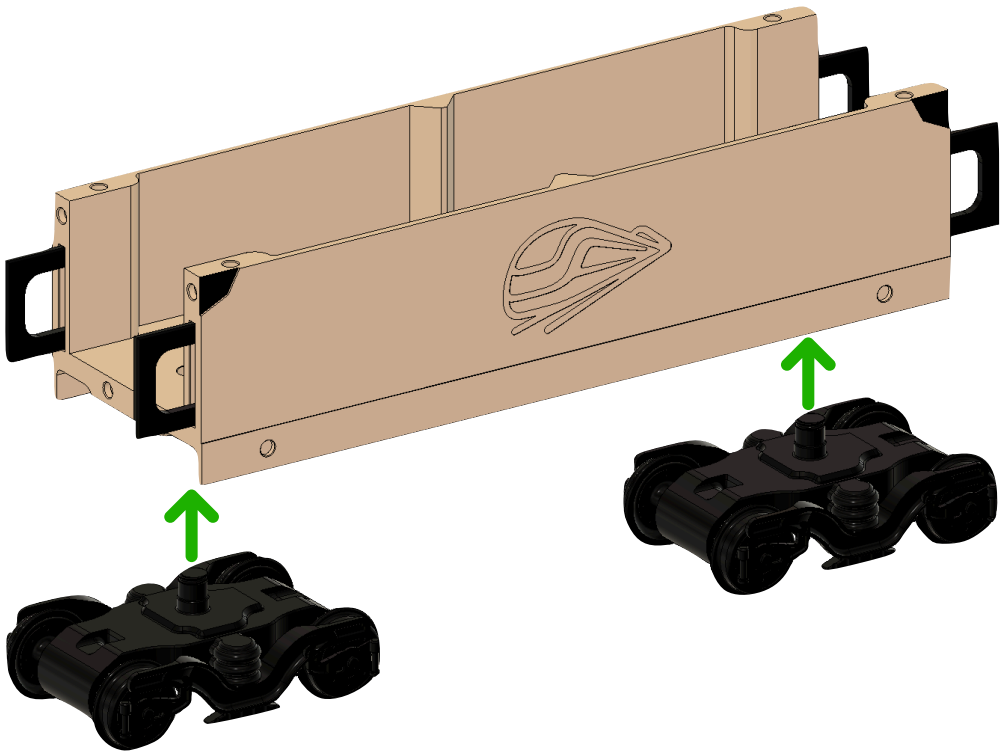

- Insert both trucks into the dedicated slots in the main body

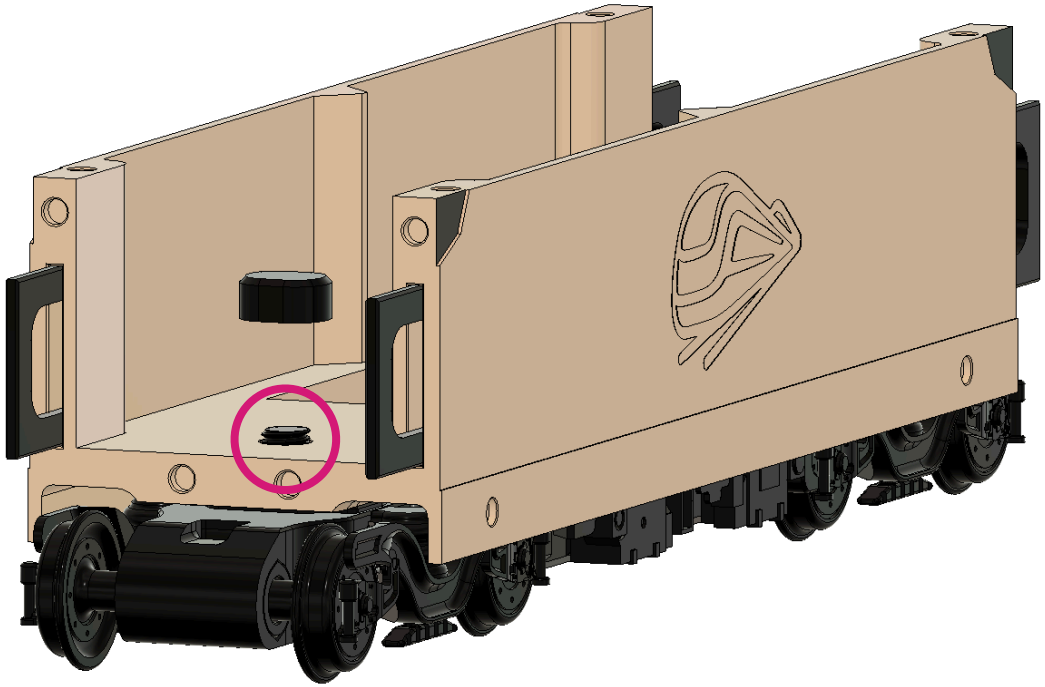

- Prepare the printed nut
- Screw it clockwise into the truck to secure it
- Please **repeat the process** once more for the other side

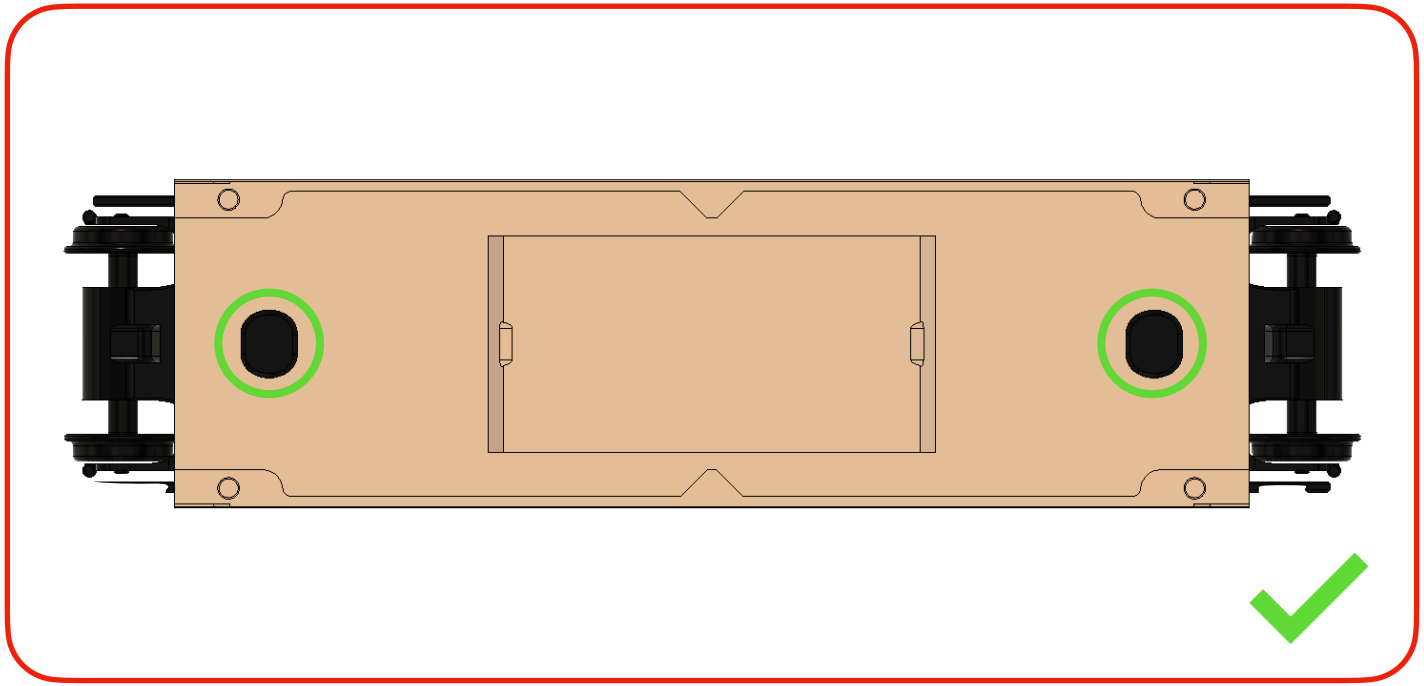

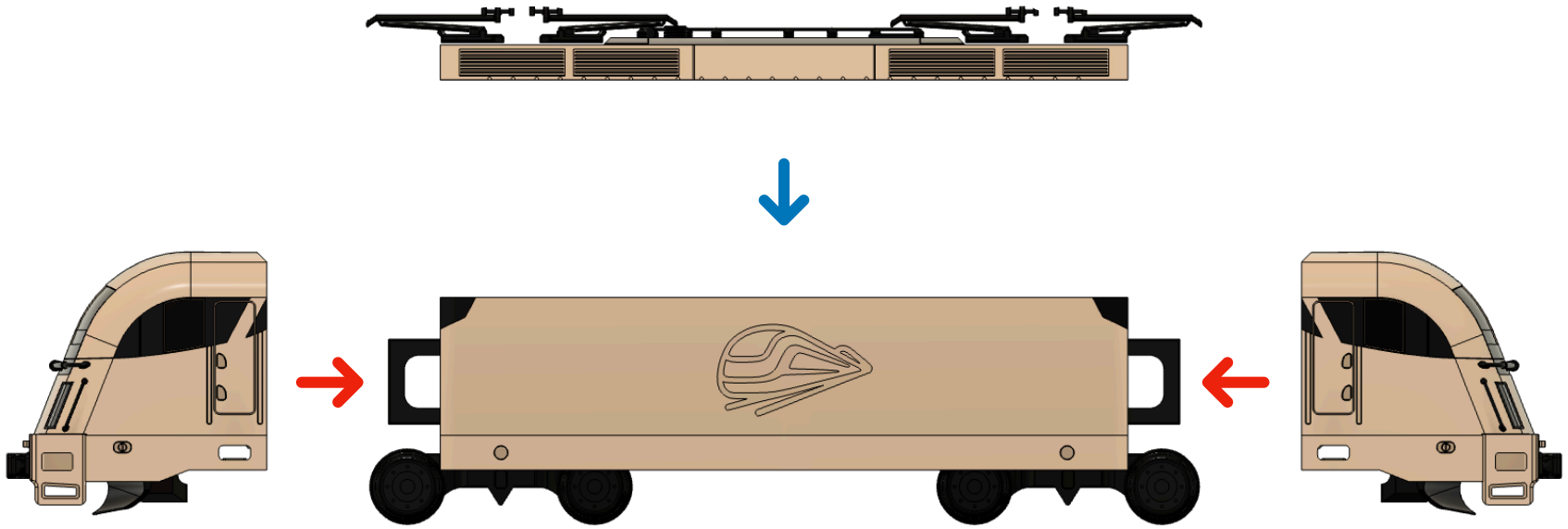

- Attach the roof assembly to the main body
- Attach both cabs to the sides of the main body

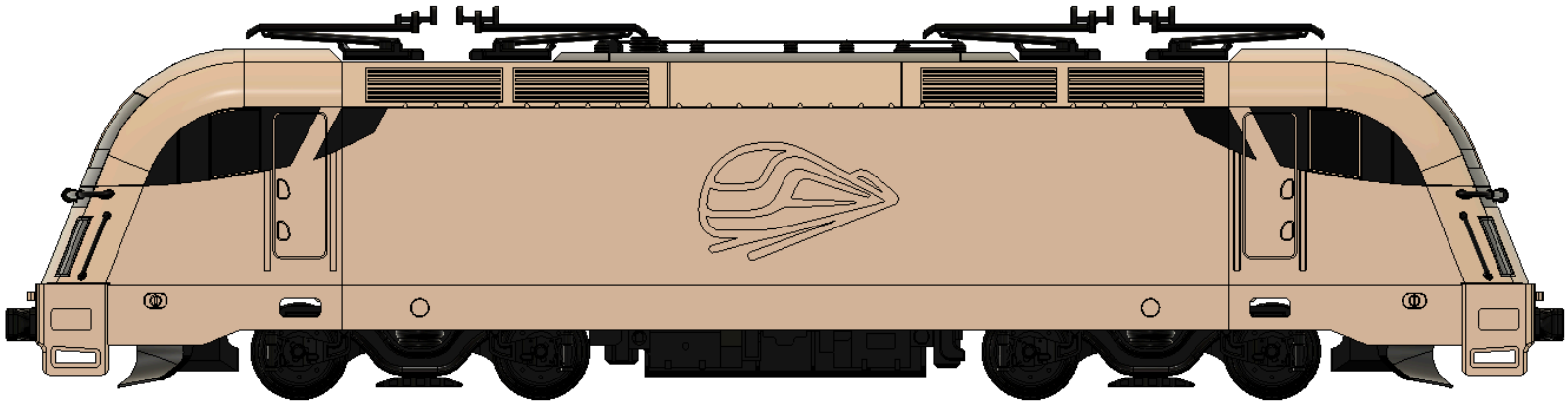

Congratulations!

Your TrackVision locomotive is complete.